LAKEWOOD/QUICKTIME SAFETY BELLHOUSING
ALL T56 TRANSMISSIONS
INSTALLATION INSTRUCTIONS

Congratulations on your purchase of the finest quality steel bellhousing available today. 100% manufactured in the USA!

Please understand that Lakewood/QuickTime safety bellhousings are not vehicle specific. They are designed to adapt specific engines to specific transmissions and may require you to do some minor work to make it fit your particular vehicle.

NOTICE: Bellhousings that meet S.F.I. (Safety Foundation Institute) specification 6.1 are supplied with an engine block plate and maximum containment fasteners that must be used. It is highly recommended that an S.F.I. approved flywheel and clutch assembly be used in conjunction with these bellhousings for additional safety precautions.

CAUTION: Installation of this safety bellhousing requires working underneath vehicle. USE EXTREME CAUTION WHEN WORKING UNDERNEATH THE VEHICLE. Never get near or underneath the vehicle until you are confident that it is safely supported and will not move or fall from its raised position. DO NOT USE A BUMPER JACK!

All bellhousings include fasteners to mount the bell to the engine and containment hardware to fasten the block plate to the bell on 6.1 S.F.I. approved housings. Transmission mounting bolts are NOT included, but all bellhousings are designed to use the stock factory transmission mounting bolts. QuickTime has transmission bolts available. The RM-170 (8pcs 10mm x 1.5 x 30mm) transmission bolt kit would be used with all Tremec T56 bellhousings.

STARTER MOTORS

Bellhousings are designed to be used with factory OE starters or equivalent except where noted in our catalog. Small compact high torque mini starters will work with all Lakewood/QuickTime bellhousings.

FLYWHEELS

Most Lakewood/QuickTime bellhousings are designed for use with factory size flywheels, except for size limitations where noted in our catalog.

IMPORTANT: Always check and confirm fitment before final installation. It is recommended to check fit the transmission into the bellhousing before mounting it to the engine. This is also a great time to bolt the block plate and flywheel to the block without the bellhousing and check your starter to flywheel engagement. Make sure the block, block plate, bellhousing, and transmission front plate are free of chips, paint, dirt, etc. Use a hone or sanding block to make sure all surfaces are clear of any debris.

PREPARING FOR INSTALLATION

1. Place the vehicle on a solid, level surface such as a garage floor to ensure safe installation.
2. Raise vehicle using appropriate lifting device and support it using automotive approved support stands having adequate load capacity.
3. Disconnect the negative (-) cable from the battery.

CAUTION: DO NOT BEGIN THIS INSTALLATION UNTIL YOU ARE CONFIDENT THAT THE VEHICLE IS SECURE AND SAFELY SUPPORTED!

INSTALLATION INSTRUCTIONS

1. Remove driveshaft, starter motor, transmission and stock bellhousing.
2. Remove pressure plate and clutch disc from flywheel.

3. At this point, we recommend that you check your Safety Bellhousing for proper alignment with the crankshaft. This is not a difficult procedure. Detailed instructions outlining the necessary steps along with recommendations for correcting any misalignment are included with these instructions.

4. After checking and correcting bellhousing alignment, remove flywheel and install block plate. Use block plate as is (the round hole in the block plate will correctly locate the starter nose assuring proper alignment). Install block plate over the crankshaft flange and place over dowel pins in the block.

IMPORTANT: In order to comply and meet S.F.I. bellhousing specification 6.1, it is mandatory that the safety block plate be installed with 6.1 bellhousings and all containment fasteners supplied be used.

5. Reinstall flywheel and clutch assembly. Be sure to tighten fasteners using manufacturers recommended torque specifications.

NOTE: We recommend the use of Mr. Gasket Ultra-Seal premium fasteners for clutch and flywheel installation when available.

IMPORTANT: Do not reuse the factory cast iron flywheel! A high performance quality billet flywheel that meets S.F.I. specifications is recommended for safety purposes. Hays offers a complete line of high performance clutches and flywheels that meet safety requirements.

6. Position your bellhousing over the flywheel/clutch assembly and slide onto dowel pins in engine block. Fasten the bellhousing to the engine block using the grade 8 bolts supplied. Make sure the fasteners supplied have the same thread size/pitch as the factory threads. Secure the block plate to the bellhousing using the grade 8 bolts, lock washers, and nuts supplied.

IMPORTANT: All fasteners must be used in their proper location for the bellhousing to meet S.F.I. specification 6.1.

NOTE: All fasteners for the engine side or transmission side should be torqued between 35 and 45 ft/lbs to maintain parallelism. It is more important that they are all torqued the same more than whether it is 35 or 45 ft/lbs.

7. Replace the starter motor, transmission and driveshaft.

8. Attach clutch linkage if applicable and check for proper adjustment.

9. Reconnect battery. RETAIN THIS INSTRUCTION SHEET FOR FUTURE REFERENCE.

BELLHOUSING ALIGNMENT PROCEDURE

Due to manufacturers' machining tolerances of engine blocks in relationship to dowel pin location, machine shop line honing, warpage of the block due to heat cycles over time, dirt, debris, chips on mating surfaces, interference with block protrusions, it is quite possible for the crankshaft centerline and bellhousing bore to be misaligned. With the transmission installed in a misaligned condition, several problems can occur, such as pilot bearing and main shaft bearing wear, difficulty in shifting, and in extreme cases, breakage of transmission gears and case.

While most bellhousings will fall within the allowable limits, it is good practice to check for register bore run out whenever any bellhousing or engine block is installed. Most factory service manuals will outline the checking procedure, but will not give correctional measures necessary to ensure trouble-free standard transmission operation.

Offset dowel pins are available from Lakewood Industries to ensure correct bellhousing installation. For checking, you will need a dial indicator (preferably with a magnetic base), a few simple tools and close attention to detail to give you accurate installation results.

1. Remove clutch assembly from flywheel and install bellhousing on engine block. (It is easier when you leave the clutch assembly off the flywheel.) Torque bellhousing bolts to 35-45 ft./lbs.

2. Because of the bellhousing configuration of the T56 bellhousing whether QuickTime or OE, the bellhousing is a little more difficult to index. One option is to use QuickTime P/N RM-130 (T56 index plate) and install it on the back side of the bellhousing using the 4 included 10mm bolts. Torque these equally to 35-45 ft./lbs. The RM-130 has a precision 4" diameter hole in the center. This allows you to dial the T56 bellhousing in similar to a 3-4-5 speed bellhousing.

Another method is using the front plate from the T56 transmission. This requires the removal of the front plate from the transmission and using the main bearing raceway to dial in the bellhousing.

3. Install dial indicator base on the flywheel and adjust plunger to contact the register bore of the housing.

4. Rotate the flywheel and note indicator reading. Misalignment is one-half of the indicator reading (maximum allowable for most transmissions is .005").

5. To correct off-center condition, select the offset dowel pin pair that is closest to one-half of the indicator reading. (i.e., if reading is .016", 1/2R=.008" use .007" dowels. If reading is .024", 1/2R=.012" use .014" dowels).

6. Remove stock dowel pins by driving out from back side or pulling out with gripper pliers.

7. Clean engine block dowel holes and coat lightly with lubricant.

8. Lubricate dowel pins and install in block. Note the position of the offset and mark the dowel for reference. They should be installed parallel to one another and in pairs (both .007", .014" and .021").

9. Install and tighten bellhousing securely. Remount the dial indicator and recheck the register bore run-out (Repeat step 3).

10. To make small corrections or adjustments to the alignment, you will need to remove the bellhousing and drive the offset dowels out of the block. Reposition the dowels and re-check register bore run-out. Repeat this procedure until the register bore is within limits.

NOTE: Always be careful when removing bellhousing from engine block so that offset dowel pins do not move or change position.

Total Indicator Reading	One-Half Total Indicator Reading	Size Dowel To Be Used	Lakewood Offset Dowel Part Number – Ford .500" dia.*	QuickTime Part # for Ford Mod Engines .628 dia.
.012" to .020"	.006" to .010"	.007"	#15950	RM-140
.022" to .034	.011" to .017"	.014"	#15960	RM-141
.036" to .052"	.018" to .026"	.021"	#15970	RM-142

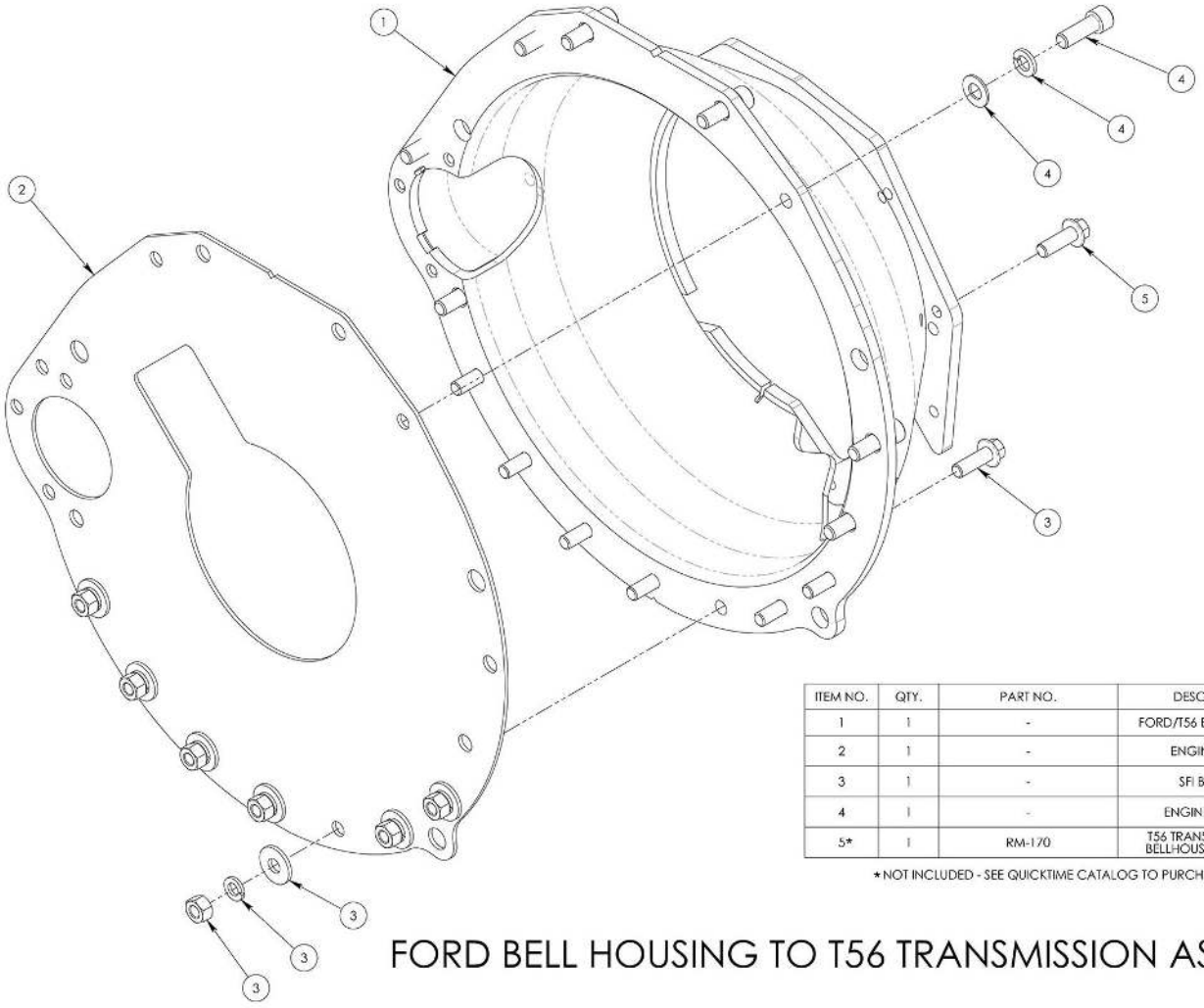

ITEM NO.	QTY.	PART NO.	DESCRIPTION
1	1	-	FORD/T56 BELL HOUSING
2	1	-	ENGINE PLATE
3	1	-	SFI BOLT KIT
4	1	-	ENGINE BOLT KIT
5*	1	RM-170	T56 TRANSMISSION TO BELLHOUSING BOLT KIT

* NOT INCLUDED - SEE QUICKTIME CATALOG TO PURCHASE

FORD BELL HOUSING TO T56 TRANSMISSION ASSEMBLY

TECHNICAL SERVICE

A highly trained technical service department is maintained by Lakewood/QuickTime to answer your technical questions, provide additional product information and offer various recommendations. See your local retailer of Lakewood/ QuickTime products for specific prices. Technical service calls, correspondence and warranty questions should be directed to the following address:

Holley Performance Products
1801 Russellville Road
Bowling Green, KY 42101
Phone 1-866-464-6553 or 270-781-9741

INST-T56
Date: 2-1-17